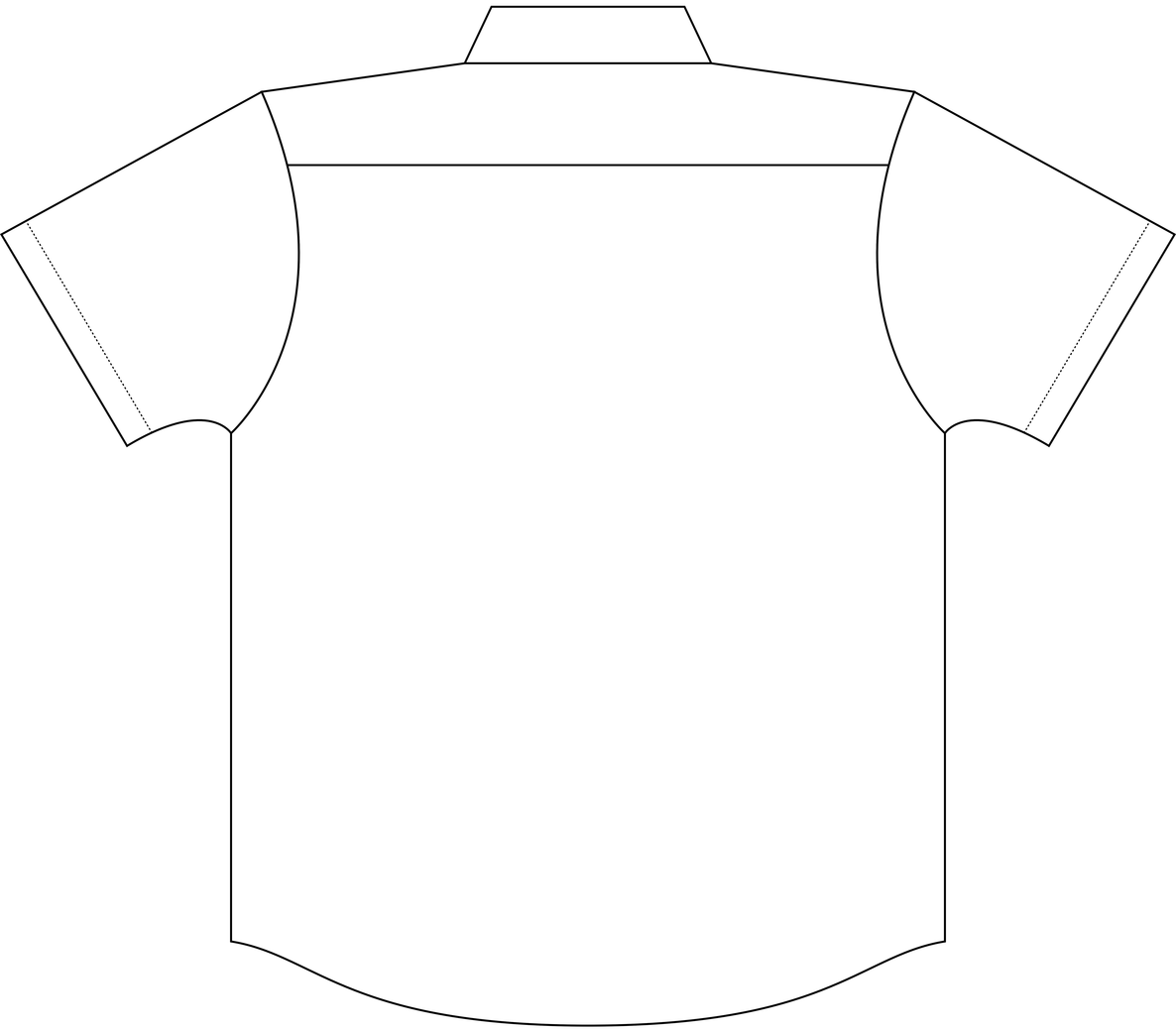

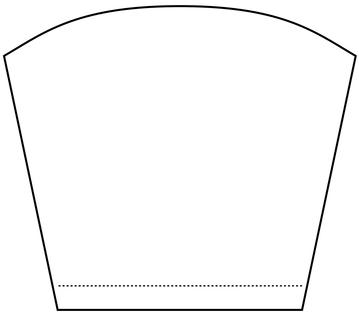

RIGHT

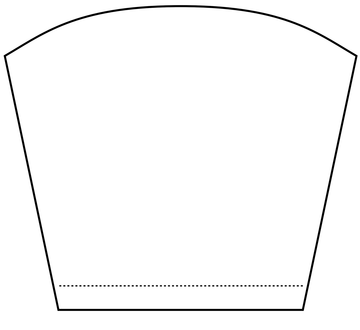

LEFT