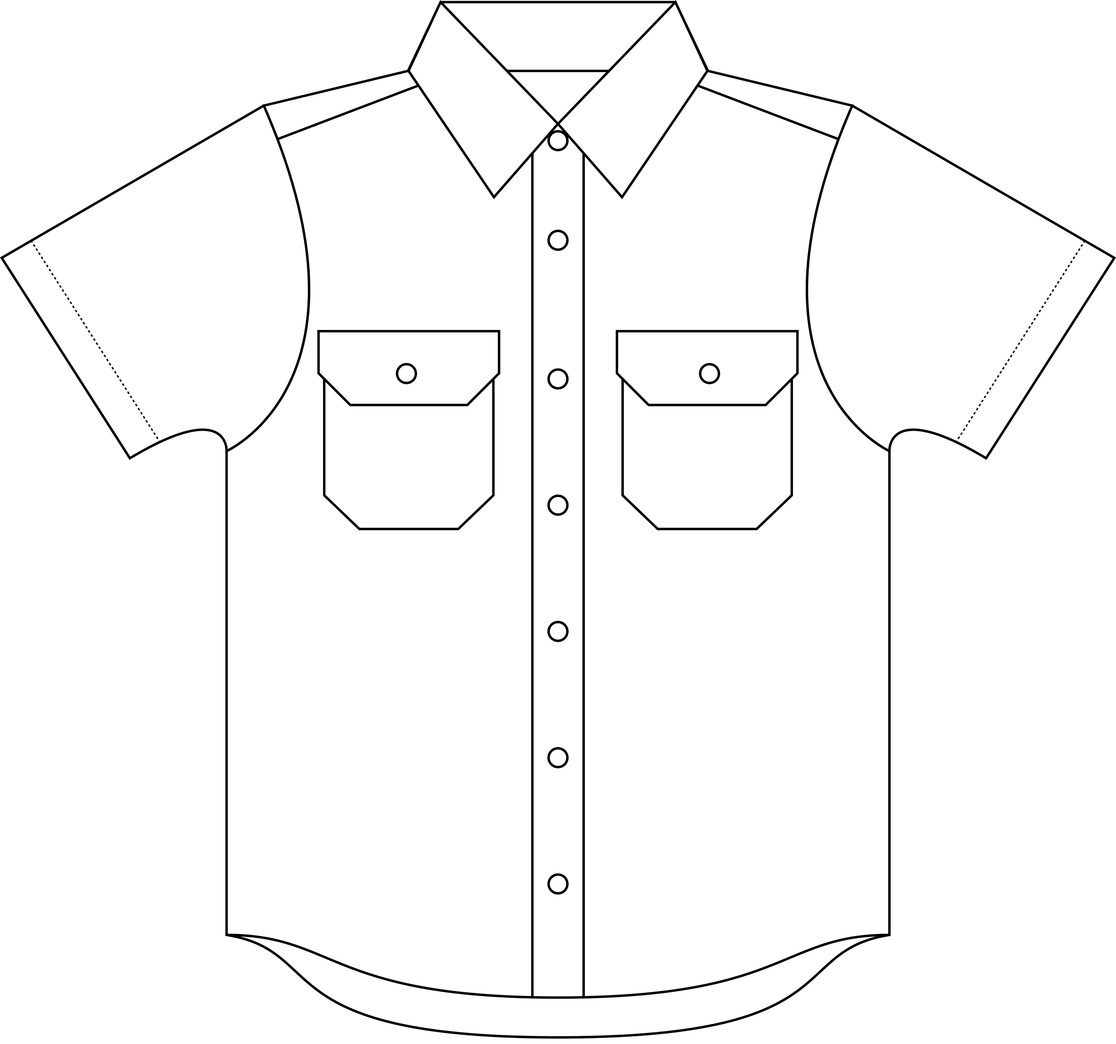

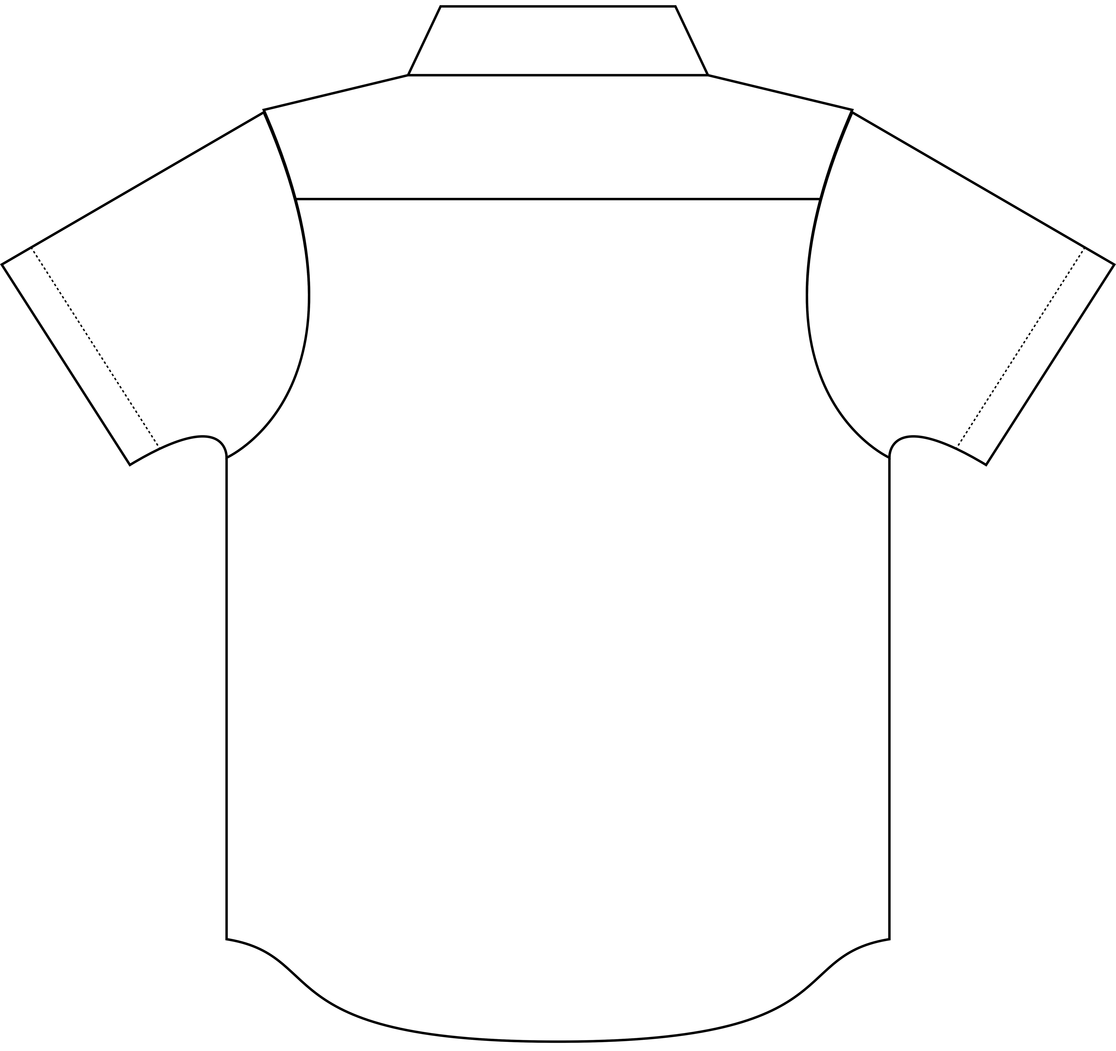

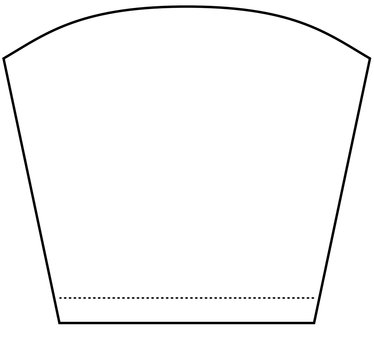

RIGHT

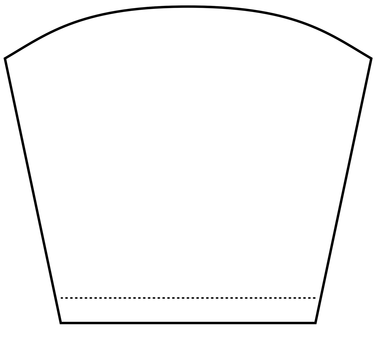

LEFT